SUBJECT:

FBF DOOR FRAME

INSTALLATION

Day-Brite Lighting

INSTRUCTION SHEET

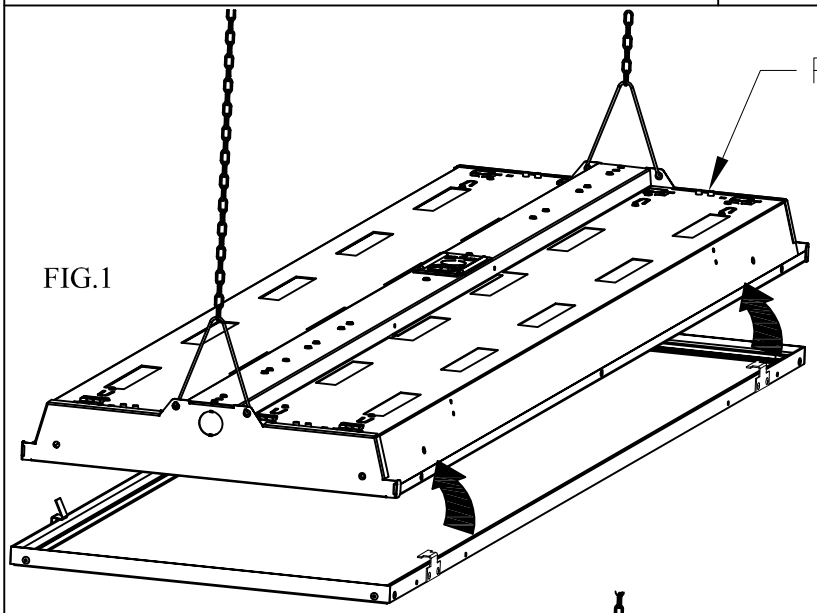

FIG.1

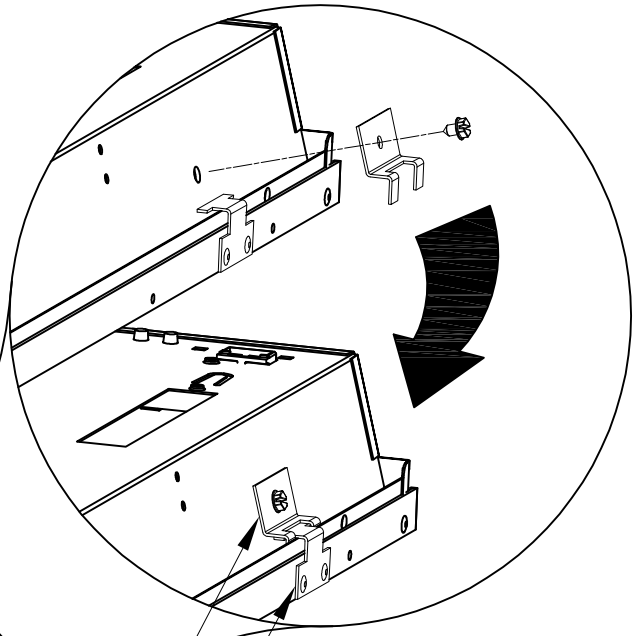

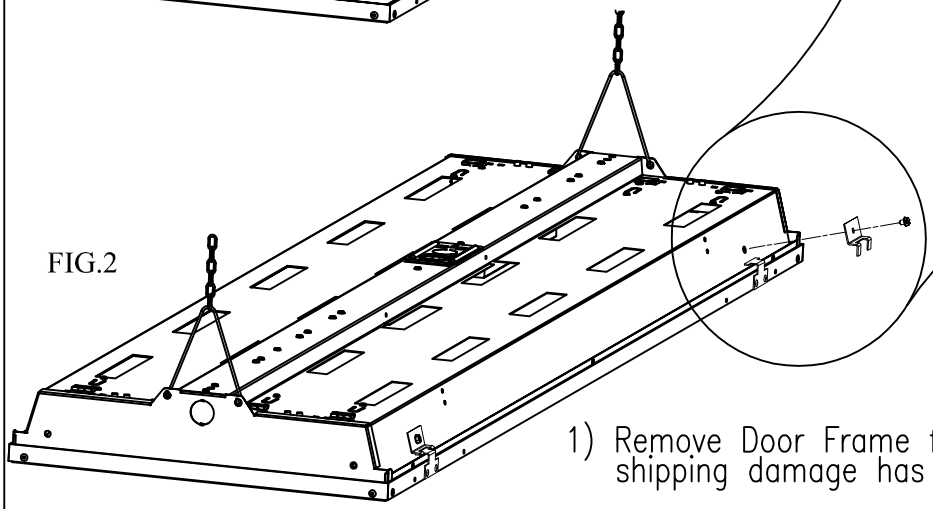

FIG.2

1) Remove Door Frame from carton and inspect to insure no shipping damage has occured.

2) This Door Frame is supplied with Spring Latch & Hinge installed.

3) Hang Door Frame on one side of FBF light fixture.(Fig 1)
Swing Door Frame up to the other side of the light fixture, and snap it closed over the fixture edge.(Fig 3)
Install Hinge Locks to make hinges captive.(Fig 2)

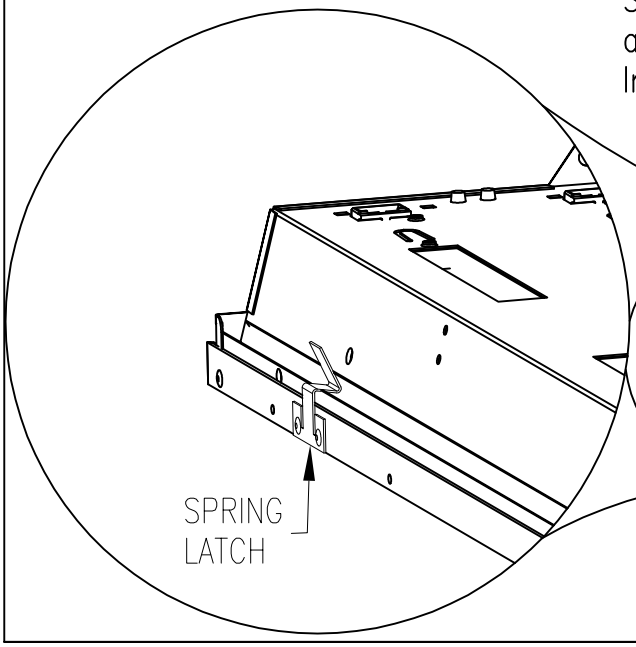

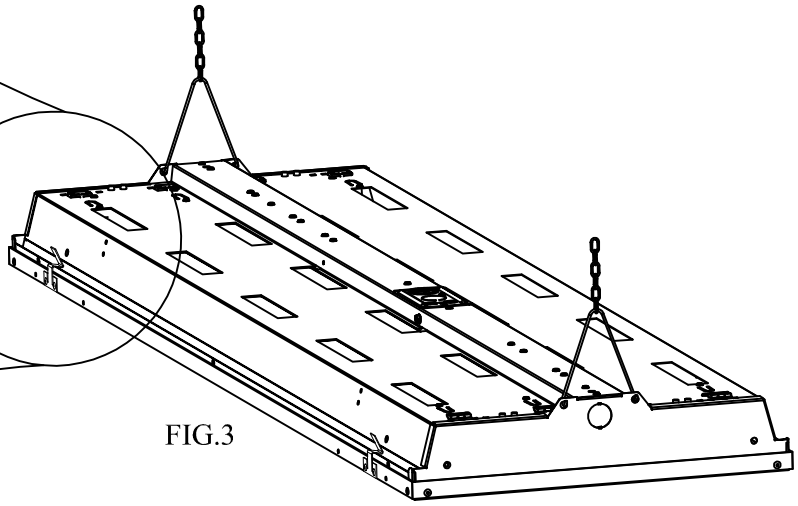

FIG.3

7 87625-936 NOV. 05